WIRING DIAGRAMS

Fig. 9: Rear Compartment & Accessories (Grids 32-35)

1987 BMW 735i

For DIAKOM-AUTO http://www.diakom.ru Taganrog support@diakom.ru (8634)315187
Copyright © 1998 Mitchell Repair Information Company, LLC
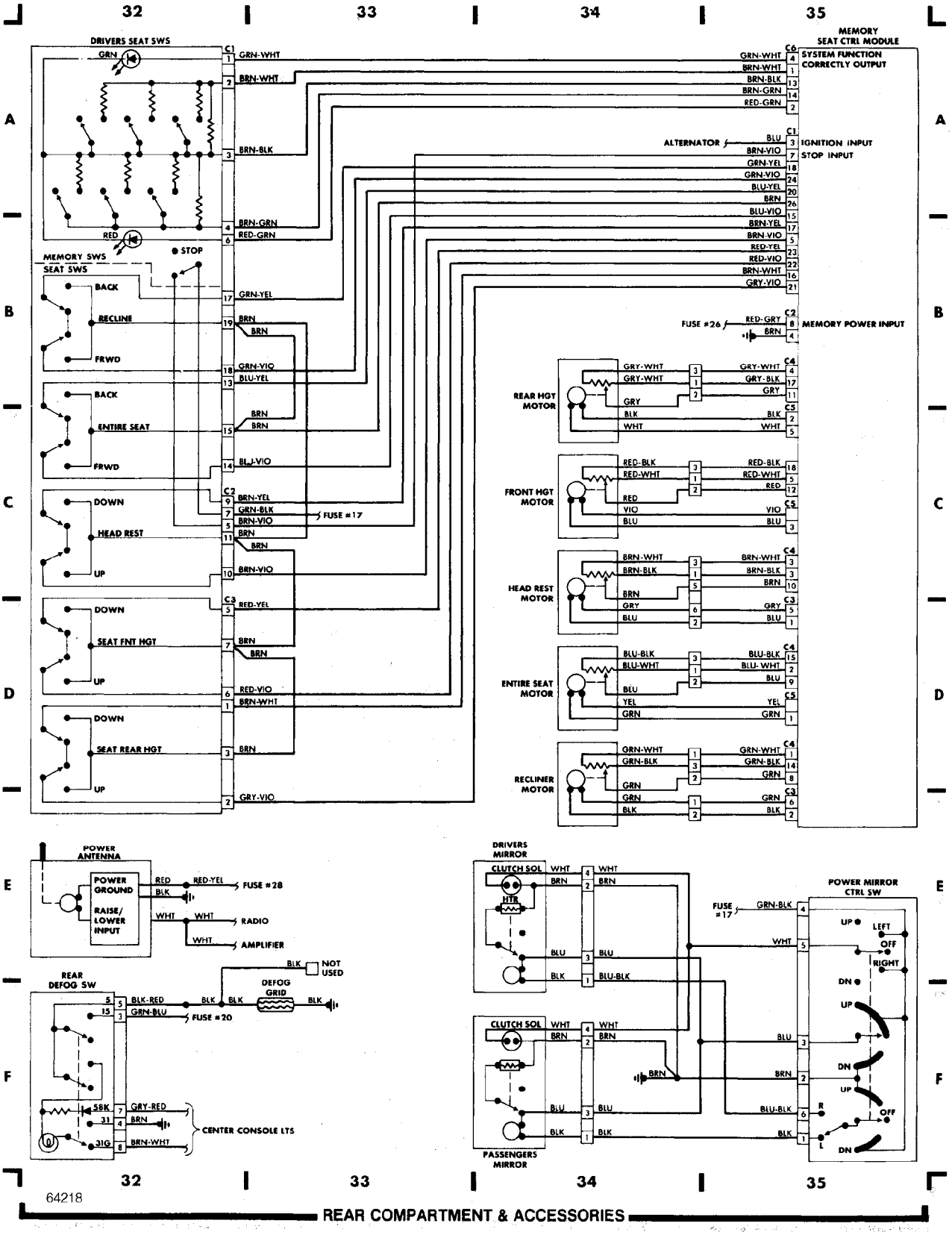
Friday, November 03, 2000 04:05PM